Feet Plate – Slot 14

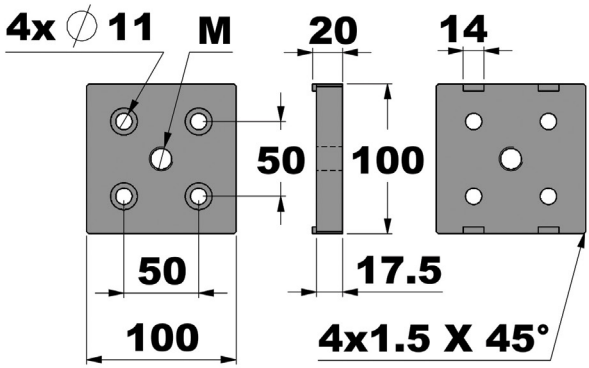

FEET PLATE FOR PROFILE 100X100 – SLOT 14

SLOT	Item №	Bolt	Material	Finish
14	FP100100	M18	STEEL	Black oxidized

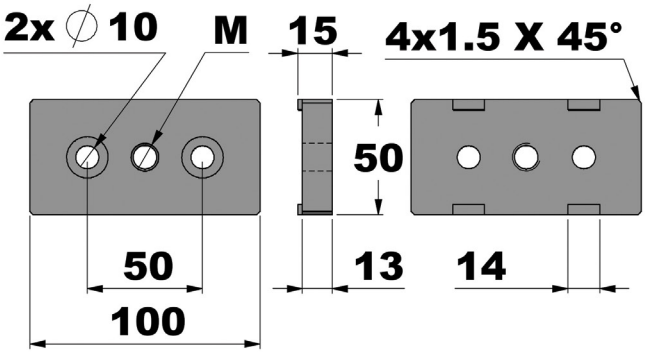

FEET PLATE FOR PROFILE 50X100 – SLOT 14

SLOT	Item №	Bolt	Material	Finish
14	FP50100-8	M8	AL-7075T	Black anodized
14	FP50100-10	M10	AL-7075T	Black anodized
14	FP50100-12	M12	AL-7075T	Black anodized
14	FP50100-16	M16	AL-7075T	Black anodized